Series 5 Extra wide dual controlled island chimney hood

I71F57

www.neff.co.uk

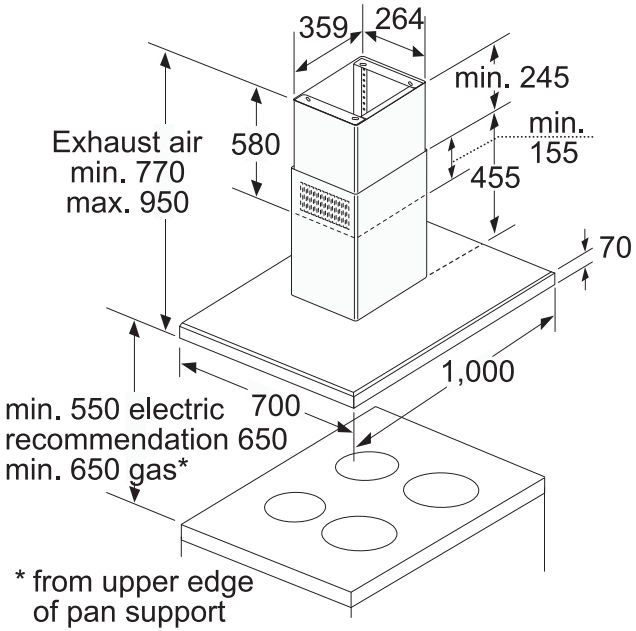

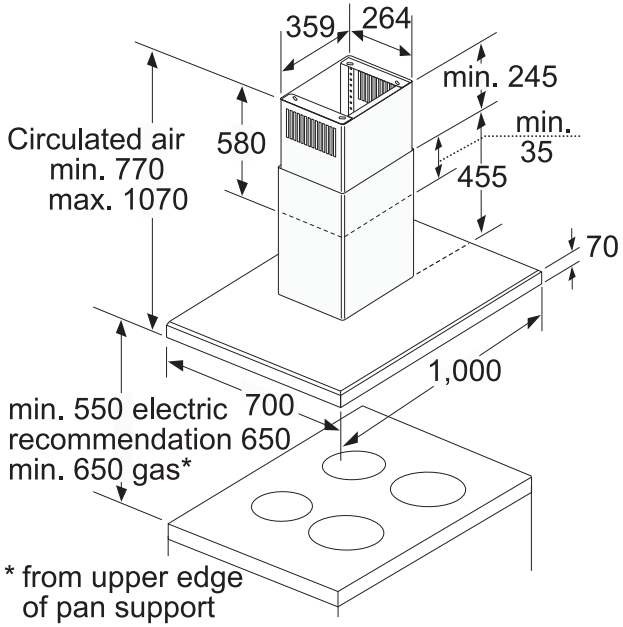

The line drawings are provided as a guide to general dimensions only and are subject to amendment without prior notice.
For full dimensional and installation details please refer to the documentation supplied with the appliance.

Copyright © BSH Home Appliances Ltd 2010