Series 2. Oven

U1722

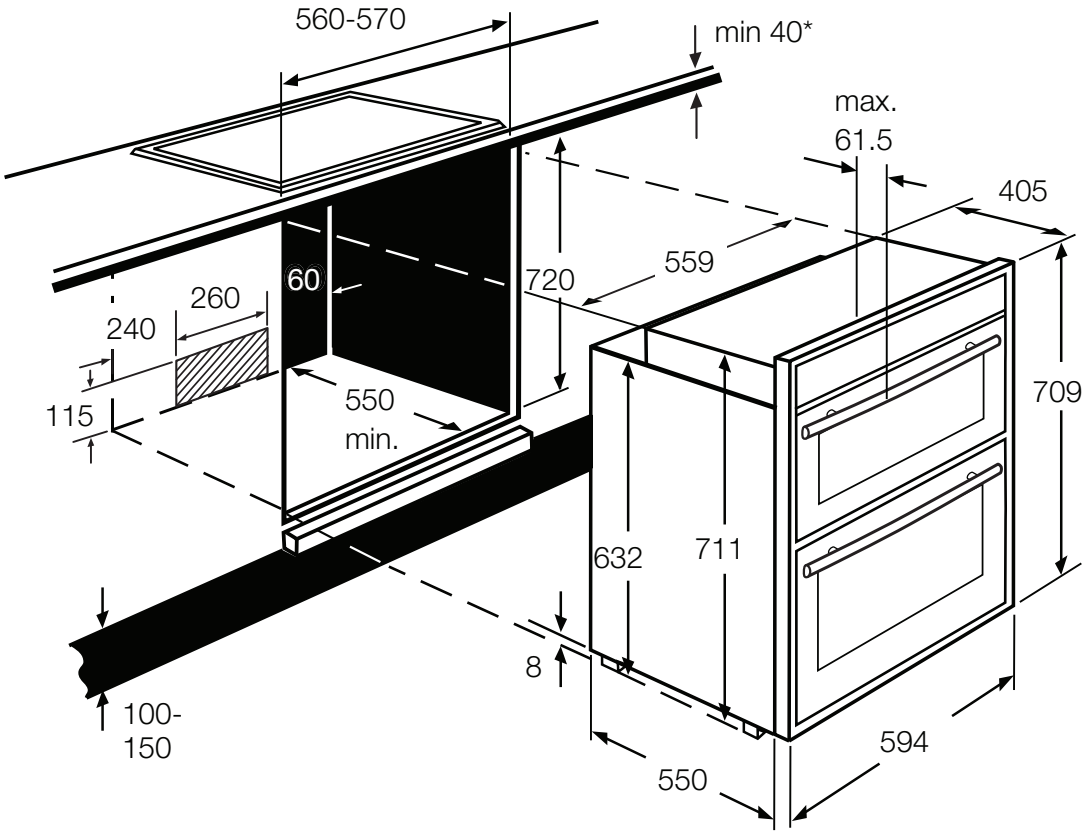

When installing below an induction hob, minimum worktop depth 50mm

The line drawings are provided as a guide to general dimensions only and are subject to amendment without prior notice.
For full dimensional and installation details please refer to the documentation supplied with the appliance.

Copyright © BSH Home Appliances Ltd 2007